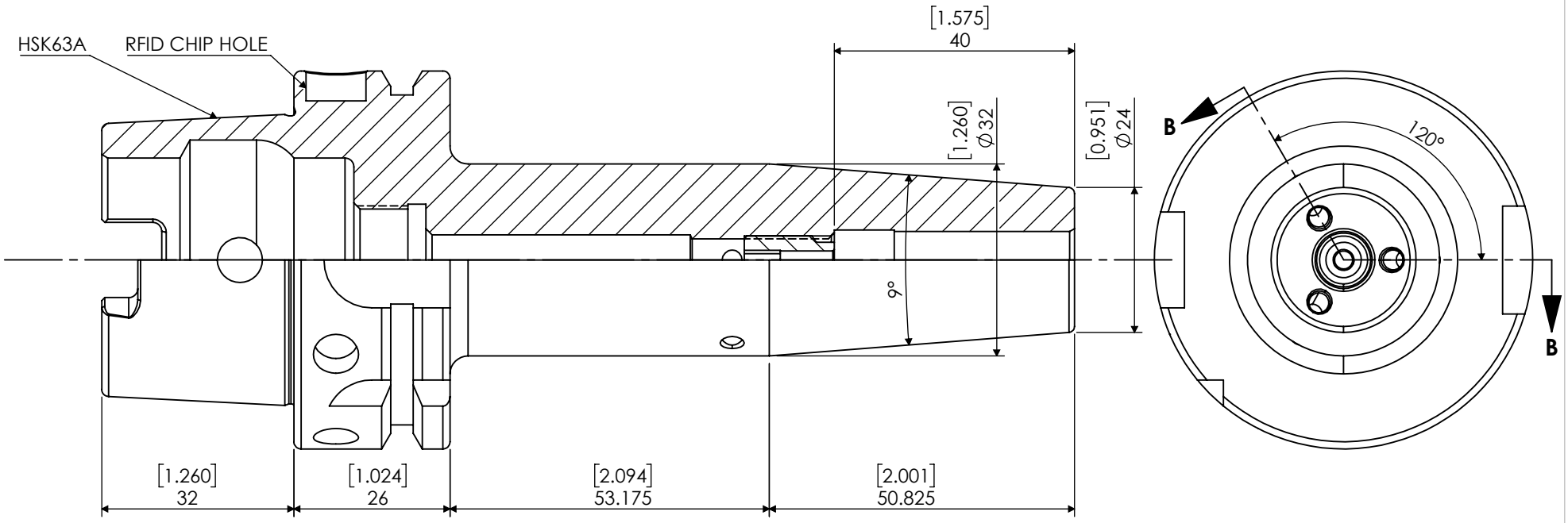


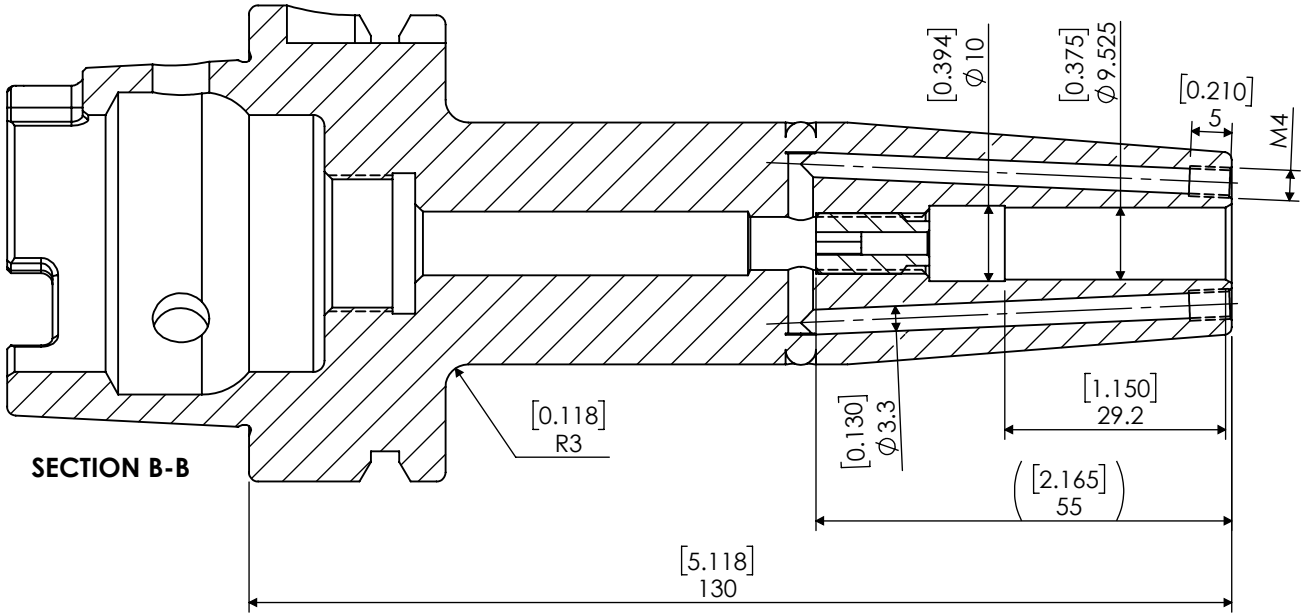


**SECTION B-B**

**PROPRIETARY AND CONFIDENTIAL**

THE INFORMATION CONTAINED IN THIS DRAWING IS THE SOLE PROPERTY OF LYNDEX NIKKEN. ANY REPRODUCTION IN PART OR AS A WHOLE WITHOUT THE WRITTEN PERMISSION OF LYNDEX NIKKEN IS PROHIBITED. DRAWING SUBJECT TO CHANGE WITHOUT NOTICE.

| | NAME | DATE |
|---|---|---|
| DRAWN | BT | 5/28/2021 |

NOTES:

HSK63A 3/8 SHRINK FIT HOLDER C.P W/ID CHIP HOLE

LYNDEX NIKKEN

| SIZE | DWG. NO. | REV. |
|---|---|---|
| A | H63A-SF0375-5.12CP | |
| SCALE 1:1 | | SHEET 1 OF 1 |

5 4 3 2 1